TH	THAILAND

Diagram / Parts List

ML013G

CORDLESS MAGNETIC LIGHT

2025/12

(TH) ML013G / CORDLESS MAGNETIC LIGHT

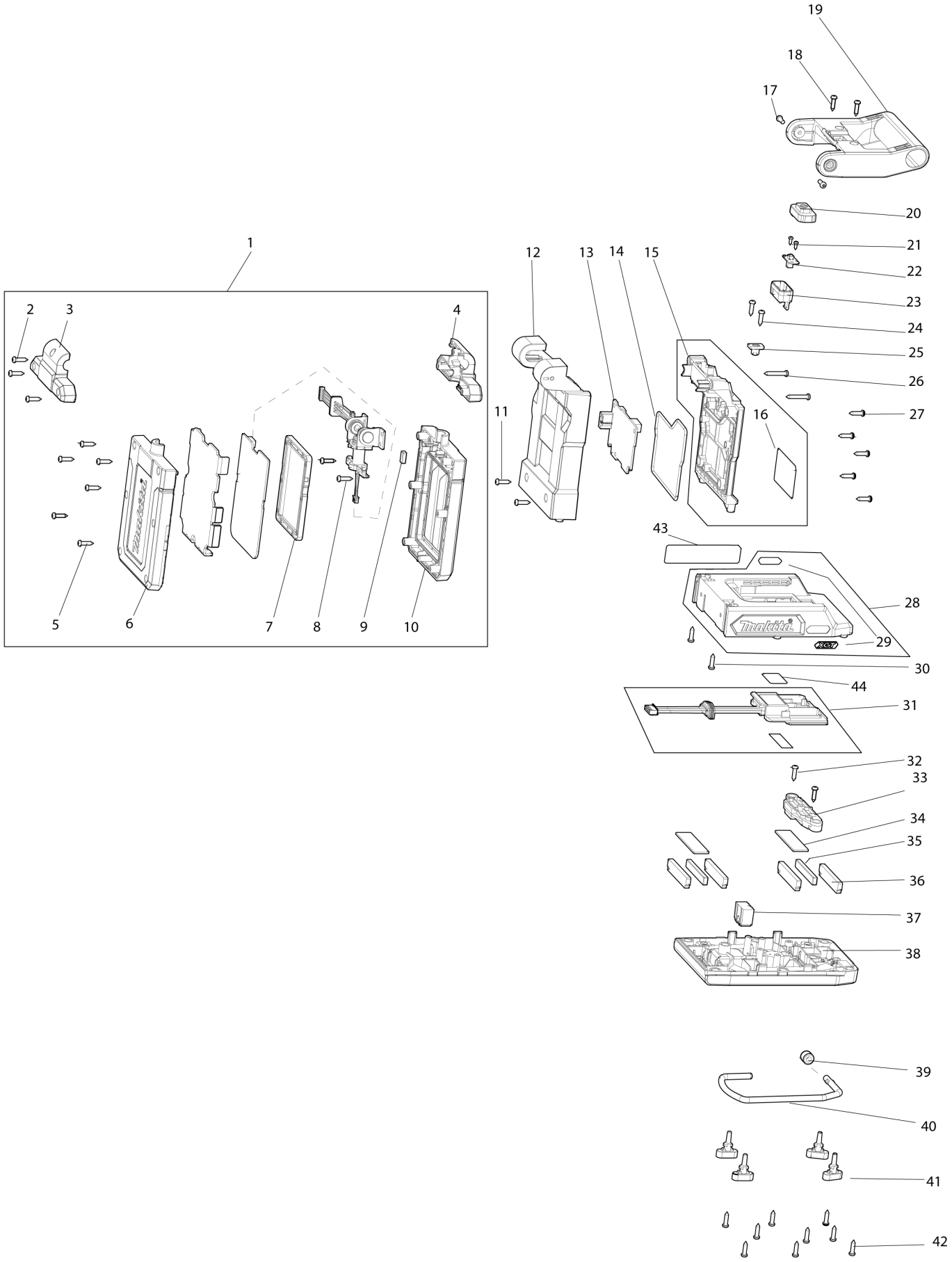

TH	THAILAND

ML013G / CORDLESS MAGNETIC LIGHT

Item	Sub	Parts No.	Parts Description	Qty	I/C	E/C No.	Close No.	Remark
001		TD00000150	LIGHT ASSY 36V	1				
	D10		INC. 2-10					
002		TD00000168	TAPPING SCREW 3X12	3				
003		TD00000169	REAR HINGE COVER	1				
004		TD00000170	FRONT HINGE COVER	1				
005		TD00000168	TAPPING SCREW 3X12	6				
006		TD00000174	LIGHT HOUSING REAR	1				
007		TD00000175	REFLECTOR	1				
008		TD00000168	TAPPING SCREW 3X12	2				
009		TD00000176	HOLD MAGNET	1				
010		TD00000177	LIGHT HOUSING WITH LENZ	1				
011		TD00000168	TAPPING SCREW 3X12	2				
012		TD00000178	PCB HOUSING	1				
013		TD00000153	CONTROLLER PCB 36V	1				
014		TD00000180	WATERPROOF RING	1				
015		TD00000207	REAR PCB HOUSING	1				
	D10		INC. 16					
016		TD00000159	CAUTION LABEL US	1			Y09695	
016-1		TD00000208	CAUTION LABEL	1	X	Y09695		
017		TD00000183	TAPPING SCREW 3X9	2				
018		TD00000168	TAPPING SCREW 3X12	2				
019		TD00000184	HANDLE	1				
020		TD00000185	SWITCH COVER	1				
021		TD00000186	TAPPING SCREW 2X6	2				
022		TD00000187	SWITCH PCB	1				
023		TD00000188	SWITCH HOUSING	1				
024		TD00000168	TAPPING SCREW 3X12	2				
025		TD00000189	RUBBER SLEEVE	1				
026		TD00000190	TAPPING SCREW 3X20	2				
027		TD00000168	TAPPING SCREW 3X12	5				
028		TD00000155	BATTERY TERMINAL HOUSING UPPER	1				
	D10		INC. 29					
029		TD00000156	XGT LABEL	2			Y09695	
029-1		TD00000218	XGT LABEL	2	X	Y09695		
030		TD00000168	TAPPING SCREW 3X12	2				
031		TD00000157	BATTERY TERMINAL ASSY XGT	1				
032		TD00000168	TAPPING SCREW 3X12	2				
033		TD00000195	MAGNET FIX PLATE	1				
034		TD00000196	SPONGE SHEET	2				
035		TD00000197	FIXED MAGNET	2				
036		TD00000198	YOKE PLATE	4				
037		TD00000199	HOOK HOLDER BLOCK	1				
038		TD00000200	BATTERY TERMINAL HOUSING LOWER	1				
039		TD00000201	RETAINING RUBBER RING FOR HOOK	1				
040		TD00000202	HOOK	1				
041		TD00000203	RUBBER FEET	4				
042		TD00000168	TAPPING SCREW 3X12	9				
043		TD00000162	NAMEPLATE US	1			Y09695	
043-1		TD00000160	NAMEPLATE EU AU RU	1	X	Y09695		
044		TD00000163	SERIAL NUMBER LABEL	1				
A01		TD00000204	MAGNETIC SHIELDING COVER	1				
F01		TD00000167	VISE ADAPTER	1				
F02		GM00001396	VISE	1				

A:

Interchange
O : Yes
X : No
< : the new part can be substituted for the current.
> : the current part can be substituted for the new.
S : Interchangeable as a set.