TH	THAILAND

Diagram / Parts List

DTL301

CORDLESS ANGLE IMPACT WRENCH

2025/08

(TH) DTL301 / CORDLESS ANGLE IMPACT WRENCH

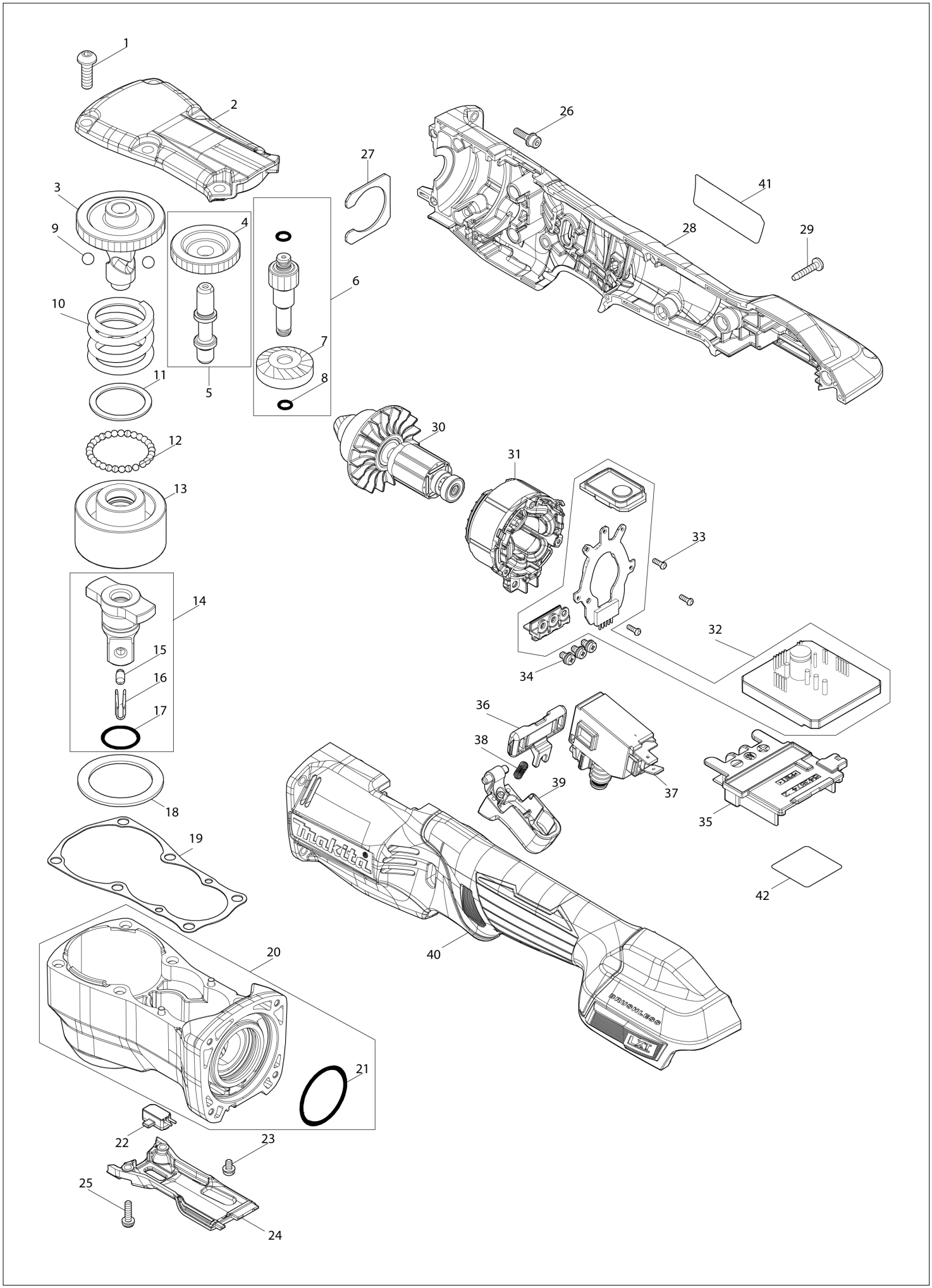

TH	THAILAND

DTL301 / CORDLESS ANGLE IMPACT WRENCH

Item	Sub	Parts No.	Parts Description	Qty	I/C	E/C No.	Close No.	Remark
001		265E34-2	HEX.SOCKETBUTTONHEADBOLTM5X1	6				
002		1411P3-4	HEAD COVER COMPLETE	1				
003		327F38-9	SPINDLE	1				
004		227C28-3	SPUR GEAR 20	1				
005		137357-7	SPINDLE B ASS'Y	1				
	D10		INC. 4					
006		137356-9	SPINDLE A ASS'Y	1				
	D10		INC. 7,8					
007		227C25-9	SPIRAL BEVEL GEAR 26	1				
008		213021-5	O RING 5	2				
009		216011-7	STEEL BALL 5.6	2				
010		232615-7	COMPRESSION SPRING 25	1				
011		267175-0	FLAT WASHER 24	1				
012		216019-1	STEEL BALL 3	29				
013		327F39-7	HAMMER	1				
014		137394-1	ANVIL ASS'Y	1				
	D10		INC. 15-17					
015		327D10-9	PIN4	1				
016		322045-1	CLIP	1				
017		213A05-9	O-RING16	1				
018		267354-0	FLAT WASHER 31	1				
019		422C56-5	GASKET	1				
020		137359-3	ANGLE HEAD ASS'Y	1				
	D10		INC. 21					
021		213437-4	O RING 28	1				
022		620S46-0	LED CIRCUIT	1				
023		652069-6	FLAT HEAD SCREW M3X6	1				
024		4132X5-5	COVER	1				
025		266816-5	+ PAN HEAD SCREW M3X12 WITH WR	2				
026		251510-2	H. S. HEAD BOLT M3X12 WITH WRM	4				
027		347D88-6	PLATE	1				
028		1831M9-5	HOUSING SET	1				
	C10	263005-3	RUBBER PIN 6	2				
	D10		INC. 40					
029		266429-2	TAPPING SCREW 3X16	8				
030		619906-7	ROTOR	1				
031		629D61-1	STATOR	1				
032		620S54-1	CONTROLLER COMPLETE	1				
033		266490-9	TAPPING SCREW PT 2X6	3				
034		652069-6	FLAT HEAD SCREW M3X6	3				
035		643874-2	TERMINAL	1				
036		457469-3	F/R CHANGE LEVER	1				
037		650075-5	SWITCH C3JW-6B-PA-8	1				
038		231433-0	COMPRESSION SPRING 4	1				
039		4132W2-4	SWITCH LEVER	1				
040		1831M9-5	HOUSING SET	1				
	C10	263005-3	RUBBER PIN 6	2				
	D10		INC. 28					
041		8151S3-8	DTL301 NAME PLATE	1				
042		8151S6-2	DTL301 SERIAL NO. LABEL	1				

A:DTL301Z(N)

Interchange
O : Yes
X : No
< : the new part can be substituted for the current.
> : the current part can be substituted for the new.
S : Interchangeable as a set.