TH	THAILAND

Diagram / Parts List

DDF482

CORDLESS DRIVER DRILL

2025/06

(TH) DDF482 / CORDLESS DRIVER DRILL

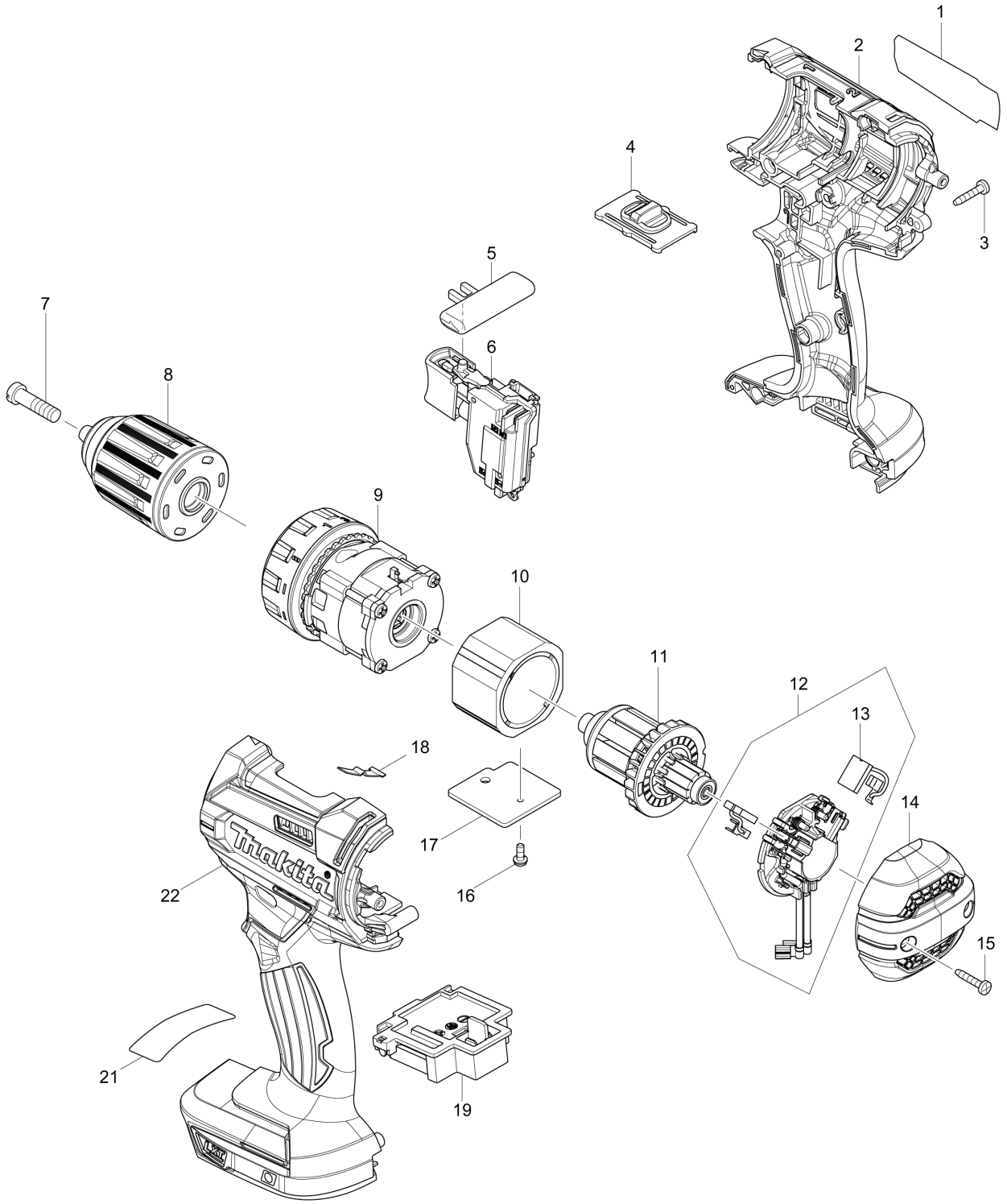

TH	THAILAND

DDF482 / CORDLESS DRIVER DRILL

Item	Sub	Parts No.	Parts Description	Qty	I/C	E/C No.	Close No.	Remark
001		851E35-2	DDF482 NAME PLATE	1				
002		183B65-0	HOUSING SET	1				
	C10	263005-3	RUBBER PIN 6	2				
	D10		INC. 22					
003		266429-2	TAPPING SCREW 3X16	9				
004		123442-2	SPEED CHANGE LEVER ASSEMBLY	1				
	C10	233438-6	COMPRESSION SPRING 4	2				
005		419041-9	F/R CHANGE LEVER	1				
006		650753-7	SWITCH C3HA-Z1A-TLF1MS	1				
	C10	620444-4	LED CIRCUIT	1				
007		251468-5	- FLAT HEAD SCREW M6X22	1				
008		766027-7	KEYLESS DRILL CHUCK 13	1				
009		123444-8	GEAR ASSEMBLY	1			C9294	
009-1		127323-2	GEAR ASSEMBLY	1	<	C9294	C9820	
009-2		127511-1	GEAR ASSEMBLY	1	<	C9820		
010A		632F32-1	YOKE UNIT	1			B5029	
010-1A		632J70-7	YOKE UNIT	1	<	B5029		
010-1B		632J70-7	YOKE UNIT	1				
011		619380-9	ARMATURE	1				
012		632F22-4	BRUSH HOLDER COMPLETE	1				
	D10		INC. 13					
013		195021-6	CARBON BRUSH SET CB-440	1				
014		456099-7	REAR COVER	1				
015		266429-2	TAPPING SCREW 3X16	2				
016A		911006-2	PAN HEAD SCREW M3X8	1			B1225	
016-1A		652066-2	+PAN HEAD SCREW M3X9 WITH W	1	<	B1225		
016-1B		652066-2	+PAN HEAD SCREW M3X9 WITH W	1				
017		689070-8	HEAT SINK	1			DB650	
017-1		689262-9	HEAT SINK	1	O	DB650		
018		232182-2	LEAF SPRING	1				
019		644808-8	TERMINAL	1				
022		183B65-0	HOUSING SET	1				
	C10	263005-3	RUBBER PIN 6	2				
	D10		INC. 2					
A01		251314-2	+ TRUSS HEAD SCREW M4X12	1				
A02		346317-0	HOOK	1				
A03		784637-8	+- BIT 2-45	1				
A04B		141856-3	PLASTIC CARRYING CASE COMPLETE	1				
	C10	162302-3	LATCH	2				
	C20	324207-7	SHAFT	1				
	C30	451749-9	HANDLE	1				
A05B		450128-8	BATTERY COVER	1				
A06B		***DC18RC	DC18RC FAST CHARGER	1				
A07B		197600-6	BATTERY BL1830B SET	2			C2803	
A07-1B		199283-8	BATTERY BL1830B SET	2	<	C2803	D0159	
A07-2B		199283-8	BATTERY BL1830B SET	2	<	D0159		
A08B		807S68-9	DDF482RFE PLASTIC CASE LABEL	2				

A:DDF482Z(N)
B:DDF482RFE(H)

Interchange
O : Yes
X : No
< : the new part can be substituted for the current.
> : the current part can be substituted for the new.
S : Interchangeable as a set.