TH	THAILAND

Diagram / Parts List

DUB187

CORDLESS BLOWER

2023/01

(TH) DUB187 / CORDLESS BLOWER

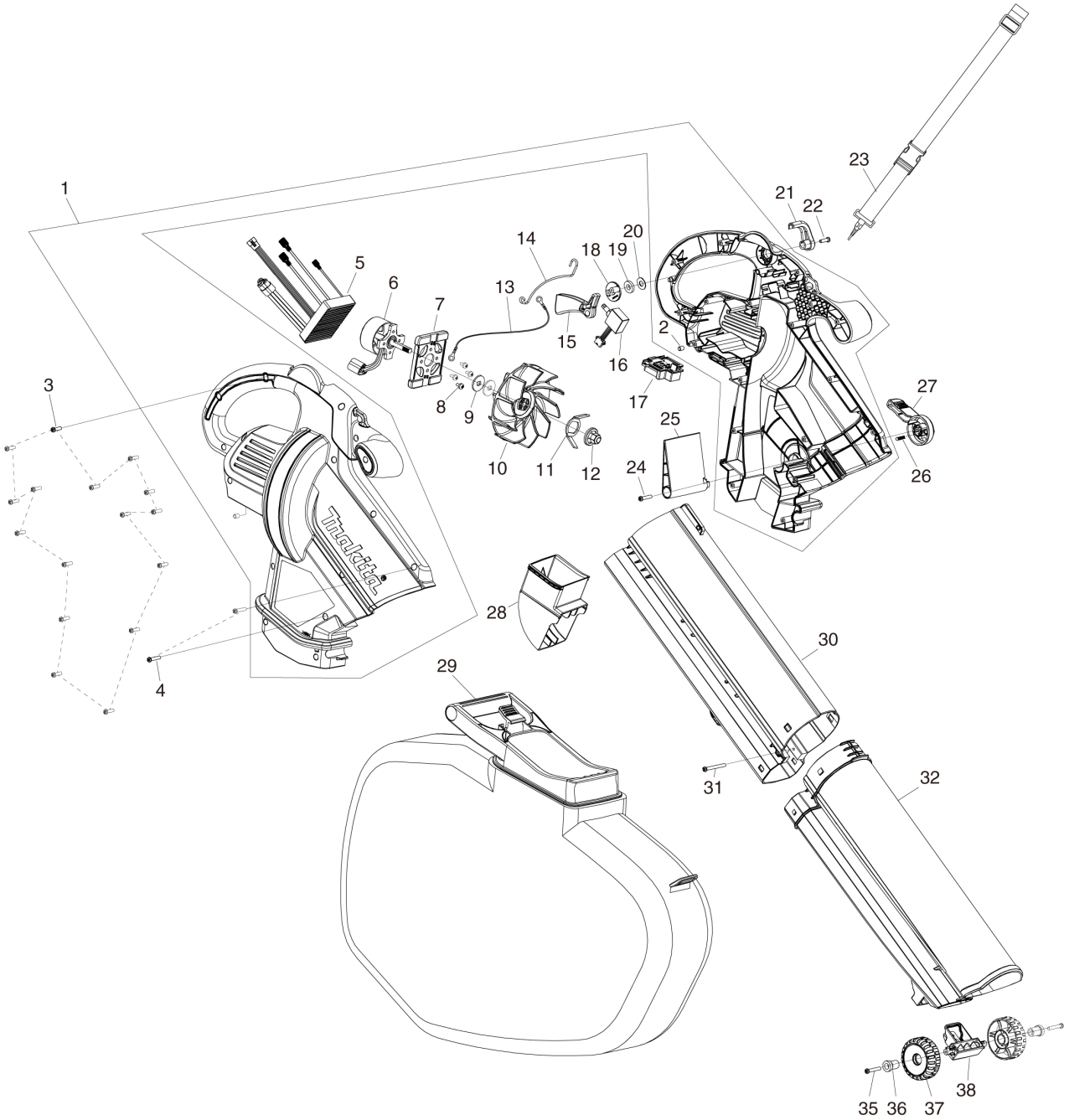

TH	THAILAND

DUB187 / CORDLESS BLOWER

Item	Sub	Parts No.	Parts Description	Qty	I/C	E/C No.	Close No.	Remark
001		GB00000172	HOUSING SET	1				
	D10		INC. 2					
002		GB00000072	RUBBER PIN 5.5X8.5	2				
003		GB00000003	TAPPING SCREW ST4.2X15	16				
004		GB00000025	TAPPING SCREW ST4.2X20	2				
005		GB00000183	CONTROLLER ASSY	1				
006		GB00000191	BRUSHLESS MOTOR ASSY	1				
007		GB00000181	MOTOR MOUNT	1				
008		GB00000180	TRAS HEAD SCREW M8X10 WITH WG	4				
009		GB00000179	SIM RING 2MM	2				
010		GB00000178	FAN 115	1				
011		GB00000177	SHREDDER BLADE 53	1				
012		GB00000176	HEX NUT M8 WITH PLASTIC CAP	1				
013		GB00000174	ANTI-STATIC WIRE ASSY	1				
014		GB00000173	ANTI-STATIC STEEL WIRE	1				
015		GB00000010	SWITCH TRIGGER	1				
016		GB00000175	SWITCH	1				
017		GB00000124	TERMINAL	1			Y09051	
017-1		GB00000184		1	O	Y09051		
018		GB00000008	SWITCH STOPPER CAM	1				
019		GB00000007	RUBBER RING 12.5X3.5	1				
020		GB00000006	FLAT WASHER 12.5	1				
021		GB00000004	SWITCH LEVER	1				
022		GB00000003	TAPPING SCREW ST4.2X15	1				
023		GB00000038	SHOULDER HARNESS ASSY	1			Y09010	
023-1		GB00000198	SHOULDER HARNESS ASSY	1	X	Y09010		
024		GB00000025	TAPPING SCREW ST4.2X20	1				
025		GB00000027	WIND SELECT SHUTTER	1			Y09010	
025-1		GB00000199	WIND SELECT SHUTTER	1	X	Y09010		
026		GB00000041	SELECTOR STOPPER PIN ASSY	1				
027		GB00000171	SELECTOR LEVER	1				
028		GB00000192	SHREDDER DUST OUTLET	1				
029		GB00000185	DUST BAG ASSY	1				
030		GB00000190	UPPER TUBE	1				
031		GB00000189	TAPPING SCREW ST4.2X40	1				
032		GB00000188	LOWER TUBE	1				
035		GB00000036	TAPPING SCREW ST4.2X25	2				
036		GB00000035	WHEEL SHAFT	2				
037		GB00000166	WHEEL 61	2				
038		GB00000167	WHEEL BRACKET	1				

A:

Interchange
O : Yes
X : No
< : the new part can be substituted for the current.
> : the current part can be substituted for the new.
S : Interchangeable as a set.