TH	THAILAND

Diagram / Parts List

BO4510H

FINISHING SANDER

2022/09

(TH) BO4510H / FINISHING SANDER

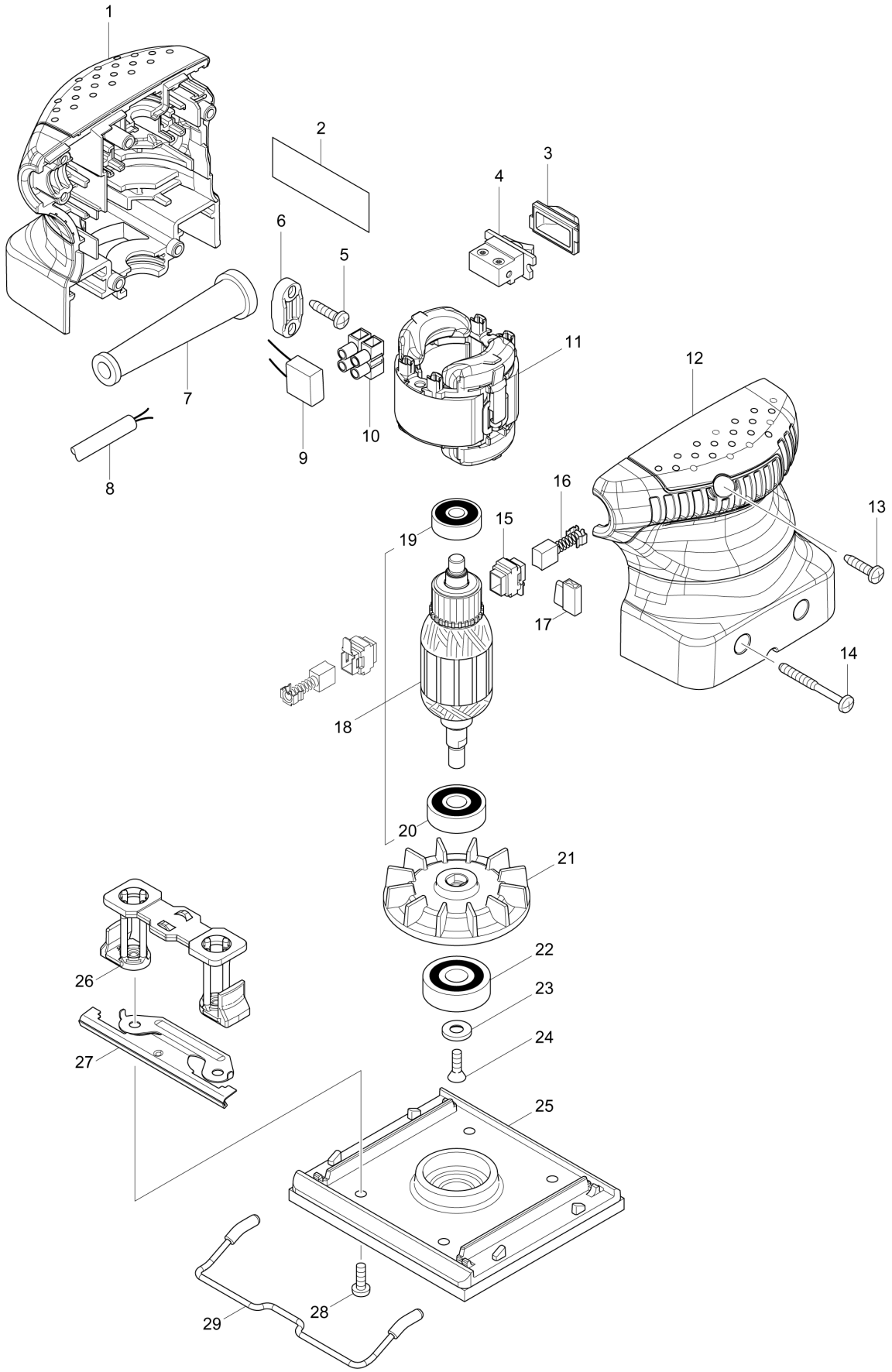

TH	THAILAND

BO4510H / FINISHING SANDER

Item	Sub	Parts No.	Parts Description	Qty	I/C	E/C No.	Close No.	Remark
001		187913-3	HOUSING SET	1				
	D10		INC. 12					
002		850A37-1	BO4510H NAME PLATE	1				
003		424039-3	SWITCH COVER	1				
004		651527-9	SWITCH	1				
005		266326-2	TAPPING SCREW 4X18	2				
006		687124-5	STRAIN RELIEF	1				
007		682569-2	CORD GUARD 8-85	1				
008		691065-9	POWER SUPPLY CORD 0.75-2-2.5	1				
011		593848-2	FIELD ASS'Y 220V	1				
	C10	654069-2	RECEPTACLE	2			DJ070	
	C11	654086-2	RECEPTACLE	2	O	DJ070		
012		187913-3	HOUSING SET	1				
	D10		INC. 1					
013		266326-2	TAPPING SCREW 4X18	2				
014		266560-4	TAPPING SCREW 4X40	2				
015		643936-6	BRUSH HOLDER	2				
016		B-80422	CARBON BRUSH SET CB-419A	1				
017		686039-3	RECEPTACLE SLEEVE	1				
018		515918-7	ARMATURE ASS'Y 220V	1				
	D10		INC. 19,20					
019		210025-8	BALL BEARING 627LLB	1				
020		211092-6	BALL BEARING 629DDW	1				
021		241652-0	FAN 65	1				
022		211066-7	BALL BEARING 6200LLB	1				
023		253825-3	FLAT WASHER 6	1				
024		912112-6	COUNTERSUNK HEAD SCREW M4X10	1				
025		142668-7	BASE COMPLETE	1				
026		455111-0	FOOT	2				
027		155957-1	CLAMPER	2				
028		915116-7	BINDING HEAD SCREW M4X12	4				
029		162365-9	LEVER COMPLETE	2				
A01		794195-6	ABRASIVE PAPER SET 114X100	1				

A:BO4510H(H)

Interchange
O : Yes
X : No
< : the new part can be substituted for the current.
> : the current part can be substituted for the new.
S : Interchangeable as a set.