| TH | THAILAND |
| --- | --- |

# Diagram / Parts List

## CP100D

## CORDLESS MULTI CUTTER

2023/05

# (TH) CP100D / CORDLESS MULTI CUTTER

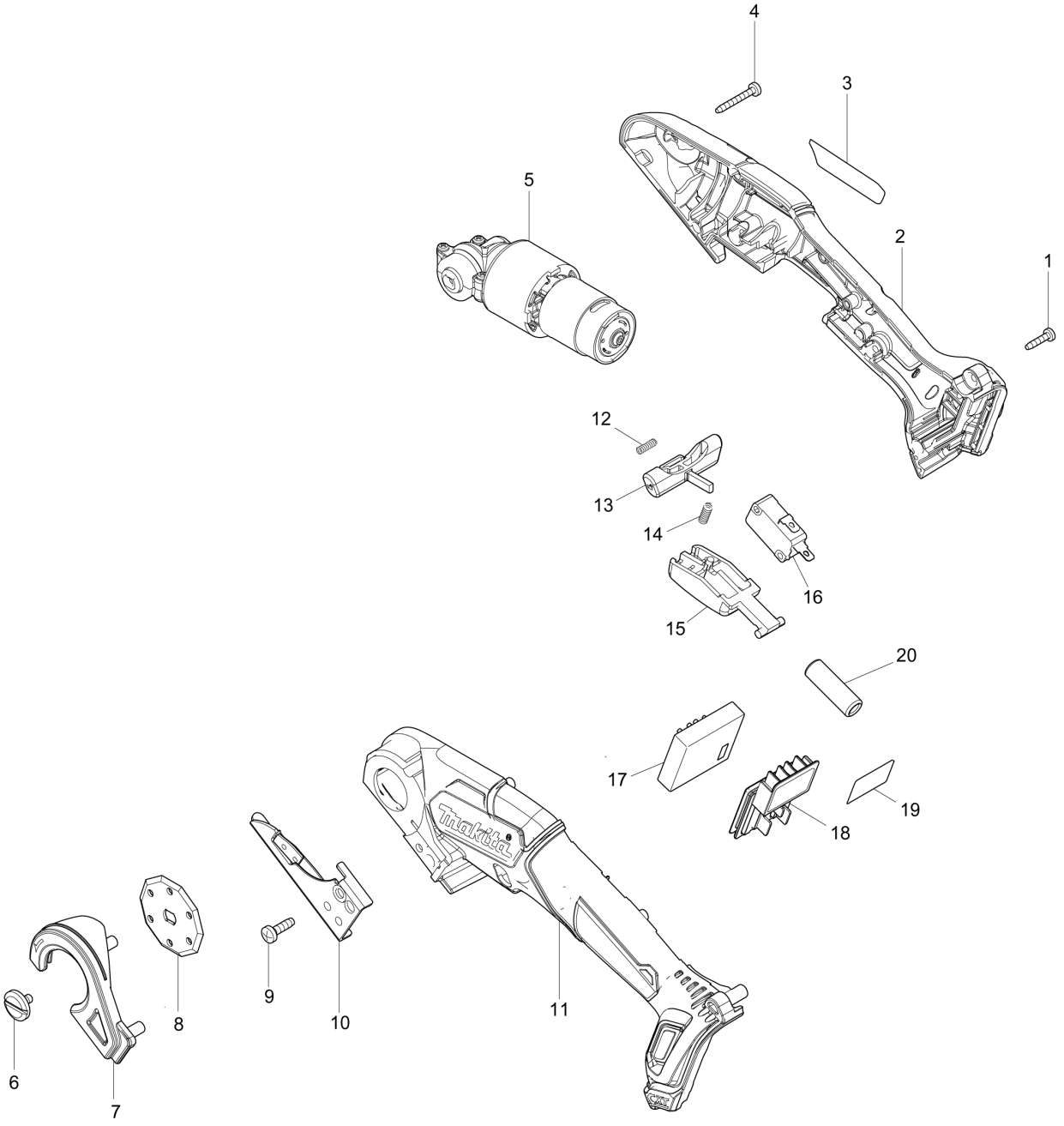

| TH | THAILAND |
|---|---|

## CP100D / CORDLESS MULTI CUTTER

| Item | Sub | Parts No. | Parts Description | Qty | I/C | E/C No. | Close No. | Remark |
|---|---|---|---|---|---|---|---|---|
| 001 | | 266404-8 | TAPPING SCREW BIND 3X14 | 6 | | | | |
| 002 | | 183G66-8 | HOUSING SET | 1 | | | | |
| | D10 | | INC. 11 | | | | | |
| 003 | | 853H52-6 | CP100D NAME PLATE | 1 | | | | |
| 004 | | 251574-6 | TAPPING SCREW BIND 3X24 | 2 | | | | |
| 005 | | 126614-8 | GEAR ASSEMBLY | 1 | | | | |
| 006 | | 251571-2 | - FLAT HEAD SCREW M4X8 | 1 | | | | |
| 007 | | 457828-1 | BLADE COVER | 1 | | | | |
| 008 | | 198604-1 | MULTI CUTTER BLADE SET | 1 | | | DL862 | |
| 008-1 | | 198603-3 | MULTI CUTTER BLADE SET | 1 | O | DL862 | | |
| 009 | | 266385-6 | TAPPING SCREW 4X14 | 1 | | | | |
| 010 | | 144620-1 | UNDER BLADE COMPLETE | 1 | | | | |
| 011 | | 183G66-8 | HOUSING SET | 1 | | | | |
| | D10 | | INC. 2 | | | | | |
| 012 | | 231469-9 | COMPRESSION SPRING 4 | 1 | | | | |
| 013 | | 457829-9 | LOCKOFF LEVER | 1 | | | | |
| 014 | | 233438-6 | COMPRESSION SPRING 4 | 1 | | | | |
| 015 | | 457830-4 | SWITCH LEVER | 1 | | | | |
| 016 | | 650744-8 | SWITCH D3V-16-3C26 | 1 | | | | |
| 017 | | 620687-8 | CONTROLLER | 1 | | | | |
| 018 | | 644813-5 | TERMINAL | 1 | | | | |
| 019 | | 853H60-7 | CP100D SERIAL NO. LABEL | 1 | | | | |
| A01B | | ***DC10WD | DC10WD BATTERY CHARGER | 1 | | | | |
| | D10 | | COMPO-PARTS | | | | | |
| A01C | | ***DC10WD | DC10WD BATTERY CHARGER | 1 | | | | |
| | D10 | | COMPO-PARTS | | | | | |
| A01D | | ***DC10WD | DC10WD BATTERY CHARGER | 1 | | | | |
| | D10 | | COMPO-PARTS | | | | | |
| A02B | | 197393-5 | BATTERY BL1016 SET | 1 | | | C2691 | |
| A02C | | 197406-2 | BATTERY BL1041B SET | 1 | | | C2801 | |
| A02-1B | | 199291-9 | BATTERY BL1016 SET | 1 | < | C2691 | D0163 | |
| A02-1C | | 199289-6 | BATTERY BL1041B SET | 1 | < | C2801 | D0165 | |
| A02-1D | | 199291-9 | BATTERY BL1016 SET | 2 | | | D0163 | |
| A02-2B | | 199291-9 | BATTERY BL1016 SET | 1 | < | D0163 | | |
| A02-2C | | 199289-6 | BATTERY BL1041B SET | 1 | < | D0165 | | |
| A02-2D | | 199291-9 | BATTERY BL1016 SET | 2 | < | D0163 | | |
| A03B | | 198589-1 | TOOL BAG SET | 1 | | | | |
| A03C | | 198589-1 | TOOL BAG SET | 1 | | | | |
| A03D | | 198589-1 | TOOL BAG SET | 1 | | | | |
| A04D | | 456128-6 | BATTERY COVER | 1 | | | | |

A:CP100DZ(N)
B:CP100DWY(H)
C:CP100DWM(H)
D:CP100DWYE(H)

Interchange
O : Yes
X : No
< : the new part can be substituted for the current.
> : the current part can be substituted for the new.
S : Interchangeable as a set.