TH	THAILAND

Diagram / Parts List

DCL284F

CORDLESS CLEANER

2023/01

(TH) DCL284F / CORDLESS CLEANER

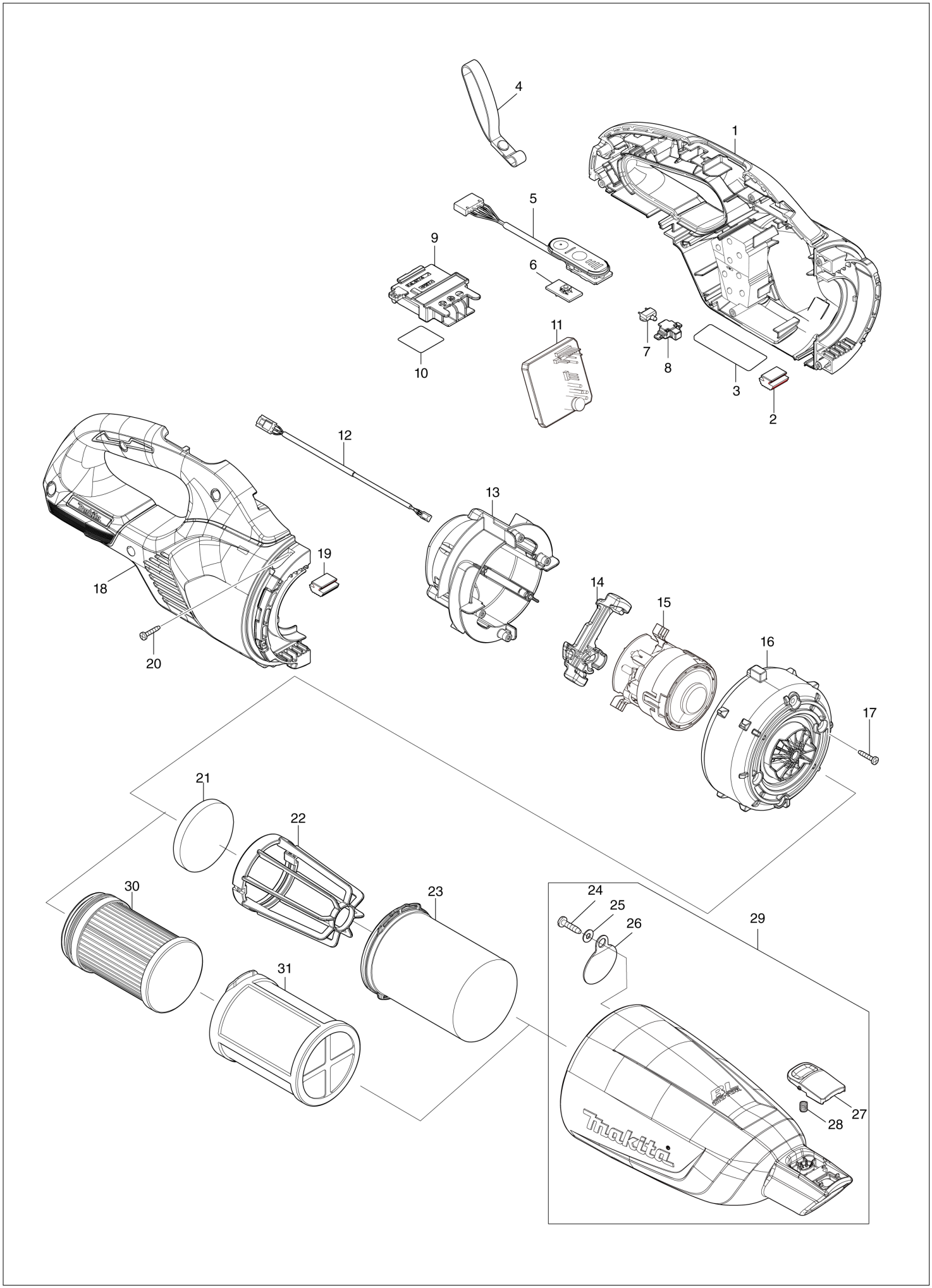

TH	THAILAND

DCL284F / CORDLESS CLEANER

Item	Sub	Parts No.	Parts Description	Qty	I/C	E/C No.	Close No.	Remark
001A		183Y66-6	HOUSING SET	1				
001B		183Y52-7	HOUSING SET	1				
001C		183Y67-4	HOUSING SET	1				
	C10	263005-3	RUBBER PIN 6	2				
	C20	422974-9	SPONGE SHEET	2				
	D10		INC. 2,18,19					
002		422460-0	RUBBER PLATE	1				
003		8588G2-5	DCL284F NAME PLATE	1				
004		163400-6	HANDSTRAP	1				
005		141B54-1	INDICATION CIRCUIT COMPLETE	1				
006		620E74-1	SWITCH UNIT	1				
007		620E82-2	LED CIRCUIT	1				
008		141H09-2	LED CASE COMPLETE	1				
009		643874-2	TERMINAL	1				
010		8588H4-8	DCL284F SERIAL NO. LABEL	1				
011		620L19-1	CONTROLLER	1				
012		632S32-9	LEAD UNIT	1				
013		141E55-7	MOTOR COVER R COMPLETE	1				
	C10	263002-9	RUBBER PIN 4	4				
014		422723-4	MOTOR COVER SEAL	1				
015		629B87-1	MOTOR ASSEMBLY	1				
016		413645-9	MOTOR COVER F	1				
017		266429-2	TAPPING SCREW 3X16	4				
018A		183Y66-6	HOUSING SET	1				
018B		183Y52-7	HOUSING SET	1				
018C		183Y67-4	HOUSING SET	1				
	C10	263005-3	RUBBER PIN 6	2				
	C20	422974-9	SPONGE SHEET	2				
	D10		INC. 1,2,19					
019		422460-0	RUBBER PLATE	1				
020		266429-2	TAPPING SCREW 3X16	7				
021		422268-2	SPONGE SHEET 57	1				
022		458467-0	STAY	1				
023		459325-3	EASY SHAKE OFF FILTER B	1				
024		266326-2	TAPPING SCREW 4X18	1				
025		941051-3	FLAT WASHER 4	1				
026		424208-6	VALVE	1				
027		413F33-6	BUTTON C	1				
028		232485-4	COMPRESSION SPRING 5	1				
029A		136964-3	CAPSULE ASSEMBLY	1				
029B		136963-5	CAPSULE ASSEMBLY	1				
029C		136965-1	CAPSULE ASSEMBLY	1				
	D10		INC. 24-28					
A01A		127827-4	NOZZLE ASSEMBLY	1				
A01B		127825-8	NOZZLE ASSEMBLY	1				
A01C		127828-2	NOZZLE ASSEMBLY	1				
	C10	268208-4	PIN 3	4				
	C20	451410-8	ROLLER	4				
	C30	422963-4	WIPER	1				
A02A		413859-0	SASH NOZZLE	1				
A02B		413770-6	SASH NOZZLE	1				
A02C		413809-5	SASH NOZZLE	1				
A03A		459355-4	NOZZLE HOLDER	1				
A03B		459354-6	NOZZLE HOLDER	1				
A03C		459038-6	NOZZLE HOLDER	1				
A04A		459356-2	PIPE	1				
A04B		459353-8	PIPE	1				
A04C		458942-6	PIPE	1				

A:DCL284FZ(N)
B:DCL284FZW(N)
C:DCL284FZB(N)

Interchange
O : Yes
X : No
< : the new part can be substituted for the current.
> : the current part can be substituted for the new.
S : Interchangeable as a set.