TH	THAILAND

Diagram / Parts List

UH4861

480MM HEDGE TRIMMER

2022/09

(TH) UH4861 / 480MM HEDGE TRIMMER

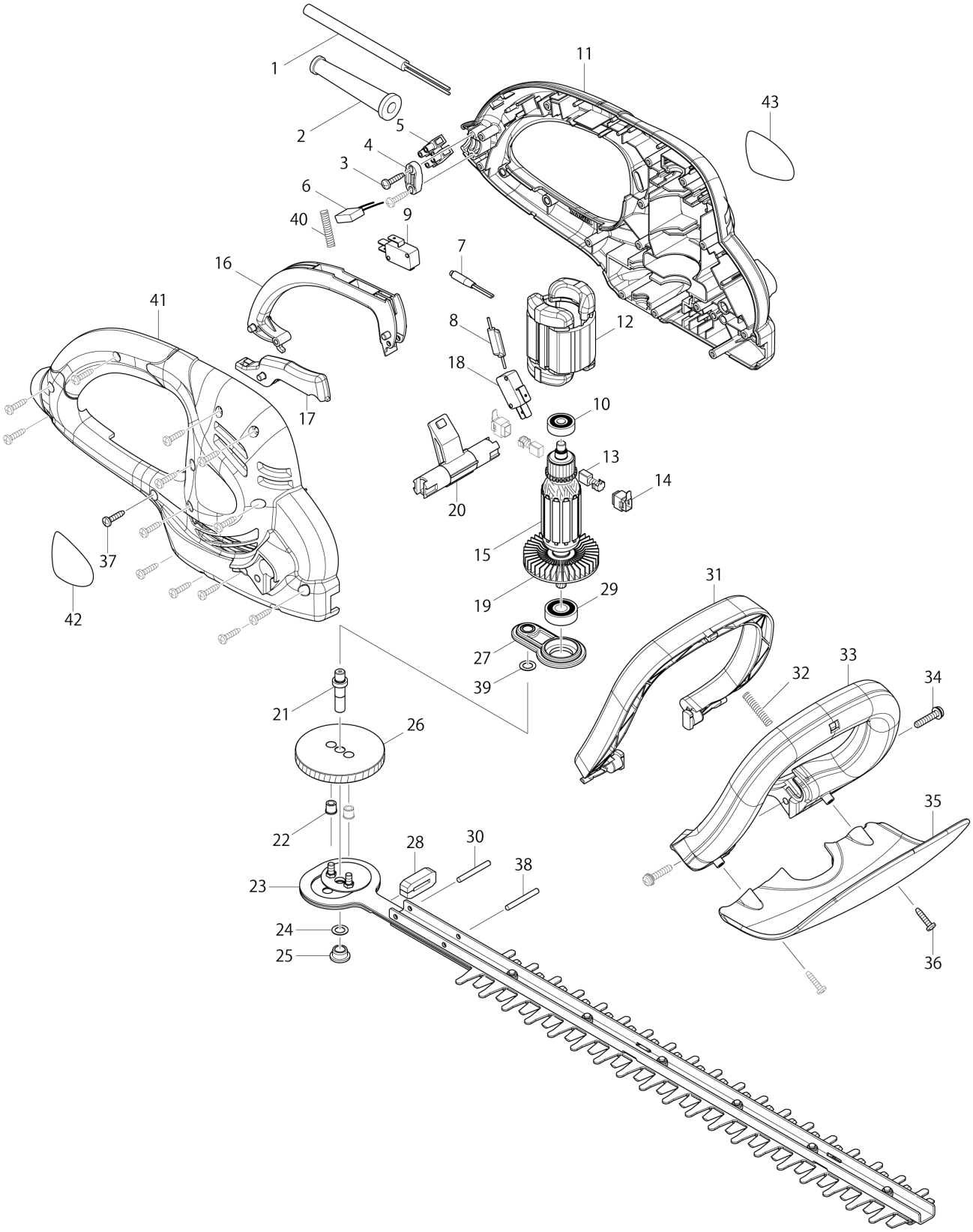

TH	THAILAND

UH4861 / 480MM HEDGE TRIMMER

Item	Sub	Parts No.	Parts Description	Qty	I/C	E/C No.	Close No.	Remark
001A		666080-2	POWER SUPPLY CORD 1.0-2-0.3	1				
001B		668160-0	POWER SUPPLY CORD 0.75-2-0.3	1				
002		682569-2	CORD GUARD 8-85	1				
003		266326-2	TAPPING SCREW 4X18	2				
004A		687123-7	STRAIN RELIEF	1				
004B		687124-5	STRAIN RELIEF	1				
005		654531-7	TERMINAL BLOCK 2P	1				
009		650642-6	SWITCH	1				
010		210030-5	BALL BEARING 627ZZ	1				
011		187052-9	HOUSING SET	1			D2570	
	C10	931202-6	HEX. NUT M5	2			D2570	
	D10		INC. 41,43				D2570	
011-1		183S09-2	HOUSING SET	1	<	D2570		
	C10	931202-6	HEX. NUT M5	2		D2570		
	D10		INC. 41,43			D2570		
012		621753-4	FIELD 220-240V	1				
013		B-80422	CARBON BRUSH SET CB-419A	1				
014		643923-5	BRUSH HOLDER	2				
015		515823-8	ARMATURE ASS'Y 220V	1				
	D10		INC. 10,19,29					
016		452677-1	SWITCH LEVER A	1				
017		452680-2	SWITCH LEVER C	1				
018		650642-6	SWITCH	1				
019		241850-6	FAN 60	1				
020		452681-0	SWITCH ARM	1				
021		326034-8	SPINDLE	1				
022		262570-9	NYLON SLEEVE 5	2				
023		140830-8	SHEAR BLADE COMPLETE	1				
024		253777-8	FLAT WASHER 8	1				
025		214064-0	PLANE BEARING 8	1				
026		227745-7	HELICAL GEAR 67	1			C3459	
026-1		227745-7	HELICAL GEAR 67	1	O	C3459		
027		140828-5	BEARING BOX COMPLETE	1				
028		423417-4	DUST GUARD	1				
029		211062-5	BALL BEARING 6000ZZ	1				
030		268136-3	PIN 4	1				
031		452678-9	SWITCH LEVER B	1				
032		233156-6	COMPRESSION SPRING 5	1				
033		452682-8	FRONT GRIP	1				
034		911243-8	PAN HEAD SCREW M5X25	2				
035		140829-3	PROTECTOR COMPLETE	1				
036		266326-2	TAPPING SCREW 4X18	2				
037		266326-2	TAPPING SCREW 4X18	14				
038		268136-3	PIN 4	1				
039		253777-8	FLAT WASHER 8	1				
040		233156-6	COMPRESSION SPRING 5	1				
041		187052-9	HOUSING SET	1			D2570	
	C10	931202-6	HEX. NUT M5	2			D2570	
	D10		INC. 11,43				D2570	
041-1		183S09-2	HOUSING SET	1	<	D2570		
	C10	931202-6	HEX. NUT M5	2		D2570		
	D10		INC. 11,43			D2570		
042		869253-8	UH4861 NAME PLATE	1				
043		892589-0	MAKITA LOGO LABEL	1				
A01		194677-2	CORD HOLDER COMPLETE SET	1				
A02		158024-1	HOOK COMPLETE	1				
A03		452684-4	BLADE COVER	1				
A04B		661905-5	EXTENSION CORD 0.75-2-10.0	1				
A05B		195246-2	SAFETY GOGGLE	1		D9661	DJ640	
F03		195050-9	CHIP RECEIVER ASSEMBLY SET	1		93100		

A:UH4861(H)
B:UH4861X(H)

Interchange
O : Yes
X : No
< : the new part can be substituted for the current.
> : the current part can be substituted for the new.
S : Interchangeable as a set.