TH	THAILAND

Diagram / Parts List

DC10SB

BATTERY CHARGER

2022/07

(TH) DC10SB / BATTERY CHARGER

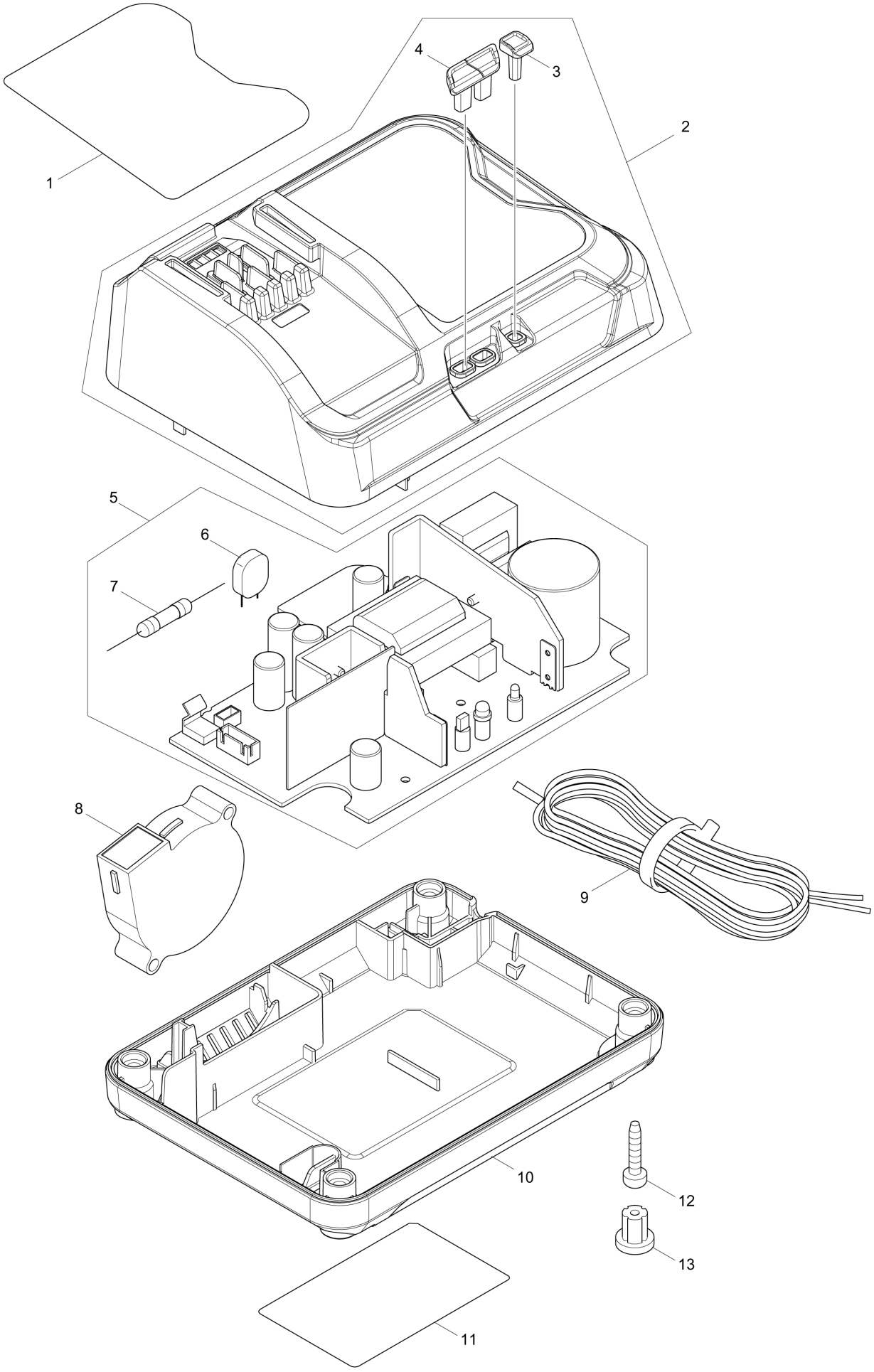

TH	THAILAND

DC10SB / BATTERY CHARGER

Item	Sub	Parts No.	Parts Description	Qty	I/C	E/C No.	Close No.	Remark
001		807B60-3	CHARGING CONDITION LABEL	1				
002		143280-6	CHARGER CASE COMPLETE	1				
	D10		INC. 3,4					
003		456049-2	LENZ	1				
004		455959-0	LENZ	1				
005		620431-3	CHARGING CIRCUIT	1			DA767	
	D10		INC. 6,7				DA767	
005-1		620H84-6	CHARGING CIRCUIT	1	<	DA767		
	D10		INC. 6,7			DA767		
006		647069-9	VARISTOR	1				
007		652804-2	FUSE	1				
008		638499-5	SCIROCCO FAN	1				
009		667985-9	VINYL CORD 0.75-2-2.0	1				
010		456048-4	CHARGER CASE COVER	1				
012		266346-6	TAPPING SCREW BT 4X20	4			D0516	
012-1		265B01-9	TAPPING SCREW PT 4X20	4	<	D0516		
013		286255-3	CAP 13	4				

A:DC10SB(H)

Interchange
O : Yes
X : No
< : the new part can be substituted for the current.
> : the current part can be substituted for the new.
S : Interchangeable as a set.