TH	THAILAND

Diagram / Parts List

DC40RB

TWO PORT MULTI FAST CHARGER

2022/06

(TH) DC40RB / TWO PORT MULTI FAST CHARGER

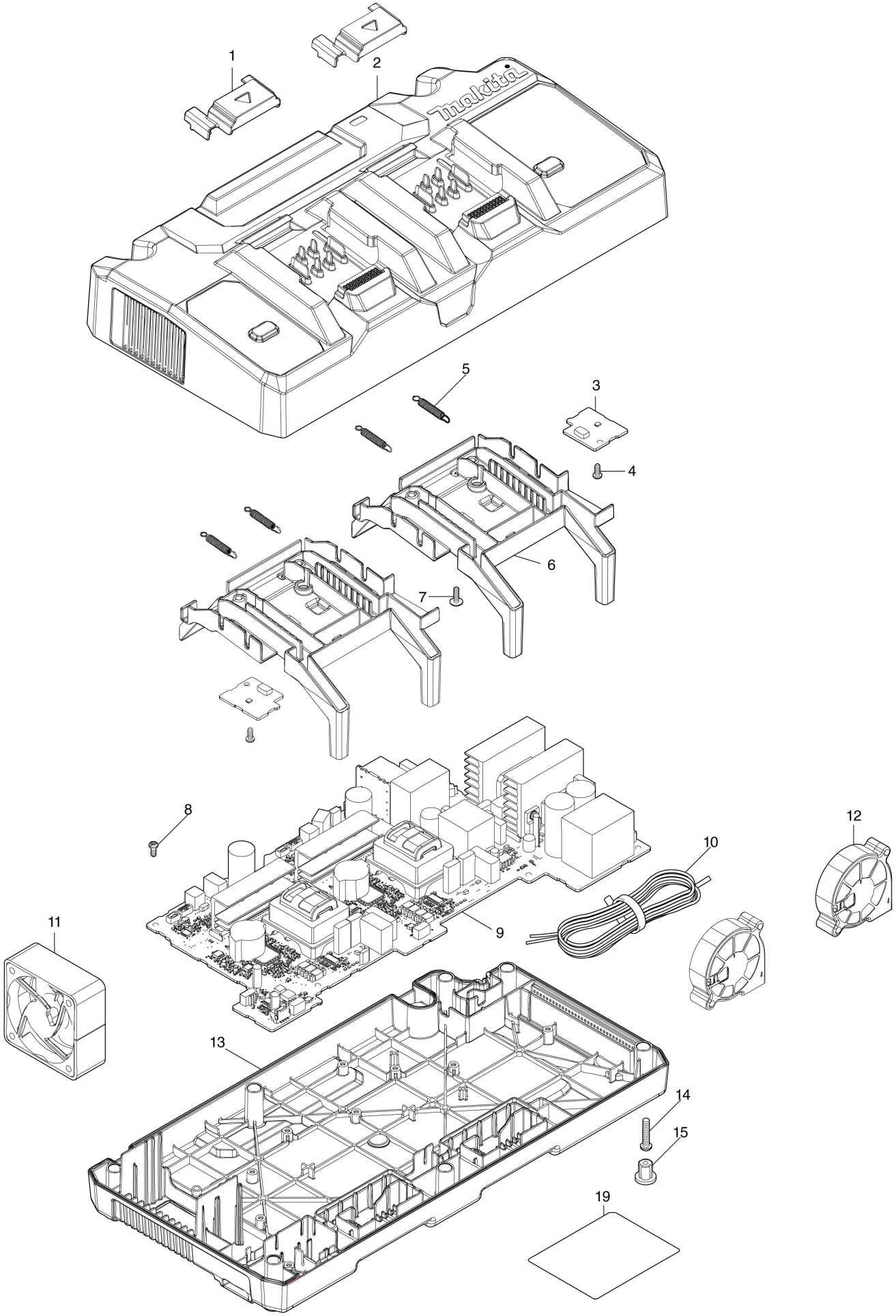

TH	THAILAND

DC40RB / TWO PORT MULTI FAST CHARGER

Item	Sub	Parts No.	Parts Description	Qty	I/C	E/C No.	Close No.	Remark
001		412892-9	TERMINAL COVER	2				
002		140Y57-0	CHARGER CASE COMPLETE	1				
	C10	412893-7	LENS	2				
	C20	8024W4-1	CHARGING CONDITION LABEL 1	1				
	C30	8024W5-9	CHARGING CONDITION LABEL 2	1				
003		620E51-3	LED CIRCUIT	2				
004		266764-8	TAPPING SCREW 3X8	2				
005		232647-4	TENSION SPRING 4	4				
006		412891-1	TERMINAL BASE	2				
007		266278-7	TAPPING SCREW FLANGE BT3X10	6				
008		266764-8	TAPPING SCREW 3X8	9				
009		620E50-5	CHARGING CIRCUIT	1				
	C10	647306-1	VARISTOR	1				
	C20	652094-7	FUSE	1				
010		667708-5	POWER SUPPLY CORD	1				
011		632R81-0	FAN 60	1				
012		632R80-2	SCIROCCO FAN	2				
013		412890-3	CHARGER CASE COVER	1				
014		266426-8	TAPPING SCREW 4X20	7				
015		286255-3	CAP 13	4				
019		811G31-4	DC40RB NAME PLATE	1				
F01		191N09-8	DC40RB 2PORT FAST CHARGER SET	1				

Interchange
O : Yes
X : No
< : the new part can be substituted for the current.
> : the current part can be substituted for the new.
S : Interchangeable as a set.