| TH | THAILAND |
| --- | --- |

# Diagram / Parts List

## DVC350

## CORDLESS VACUUM CLEANER

2021/01

# (TH) DVC350 / CORDLESS VACUUM CLEANER

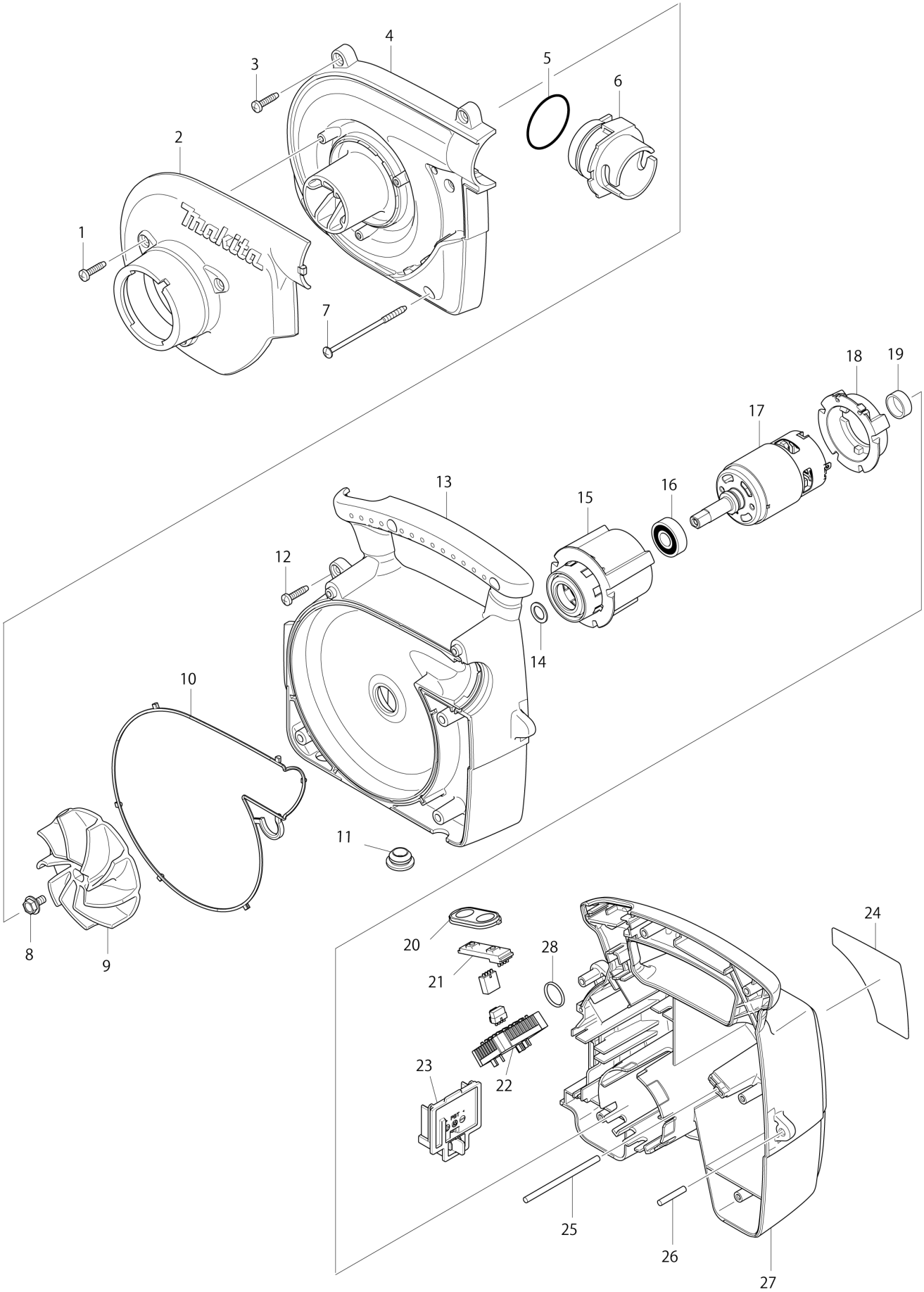

| TH | THAILAND |
|---|---|

# DVC350 / CORDLESS VACUUM CLEANER

| Item | Sub | Parts No. | Parts Description | Qty | I/C | E/C No. | Close No. | Remark |
|---|---|---|---|---|---|---|---|---|
| 001 | | 265995-6 | TAPPING SCREW 4X18 | 3 | | | | |
| 002 | | 140642-9 | FRONT COVER COMPLETE | 1 | | | | |
| 003 | | 265995-6 | TAPPING SCREW 4X18 | 2 | | | | |
| 004 | | 451989-9 | FAN COVER | 1 | | | | |
| 005 | | 213508-7 | O RING 38 | 1 | | | | |
| 006 | | 452067-8 | JOINT | 1 | | | | |
| 007 | | 266049-2 | TAPPING SCREW 4X75 | 3 | | | | |
| 008 | | 266614-7 | HEX. FLANGE HEAD BOLT M5X10 | 1 | | | | |
| 009 | | 240122-6 | FAN 86 | 1 | | | | |
| 010 | | 424332-5 | SEAL RING | 1 | | | | |
| 011 | | 286238-3 | CAP 19 | 4 | | | | |
| 012 | | 265995-6 | TAPPING SCREW 4X18 | 3 | | | | |
| 013 | | 187008-2 | MOTOR HOUSING SET | 1 | | | | |
| | D10 | | INC. 10,27 | | | | | |
| 014 | | 267047-9 | FLAT WASHER 10 | 1 | | | | |
| 015 | | 424330-9 | MOTOR RUBBER RING A | 1 | | | | |
| 016 | | 210059-1 | BALL BEARING 6000DDW | 1 | | | | |
| 017 | | 629888-5 | DC MOTOR | 1 | | | | |
| 018 | | 424331-7 | MOTOR RUBBER RING B | 1 | | | | |
| 019 | | 421940-3 | CAP | 1 | | | | |
| 020 | | 140463-9 | SWITCH PLATE COMPLETE | 1 | | | | |
| 021 | | 631973-2 | SWITCH UNIT | 1 | | | | |
| 022 | | 620036-9 | CONTROLLER | 1 | | | | |
| 023 | | 643852-2 | TERMINAL | 1 | | | | |
| 024 | | 815X14-8 | DVC350 NAME PLATE | 1 | | | | |
| 025 | | 268092-7 | PIN 4 | 1 | | | | |
| 026 | | 256206-0 | PIN 4 | 1 | | | | |
| 027 | | 187008-2 | MOTOR HOUSING SET | 1 | | | | |
| | D10 | | INC. 10,13 | | | | | |
| 028 | | 259048-1 | RING | 1 | | | | |
| A01 | | 122918-6 | DUSTBAG ASSEMBLY 3L | 1 | | | | |
| A02 | | 140456-6 | HOSE COMPLETE 28-2.5 | 1 | | | | |
| A03 | | 166094-6 | SHOULDER BELT | 1 | | | | |
| A04 | | 132025-7 | NOZZLE ASS'Y | 1 | | | | |
| | C10 | 414145-2 | JOINT | 1 | | | | |
| A05 | | 417766-9 | FRONT CUFF 38 | 1 | | | | |

Interchange
O : Yes
X : No
< : the new part can be substituted for the current.
> : the current part can be substituted for the new.
S : Interchangeable as a set.